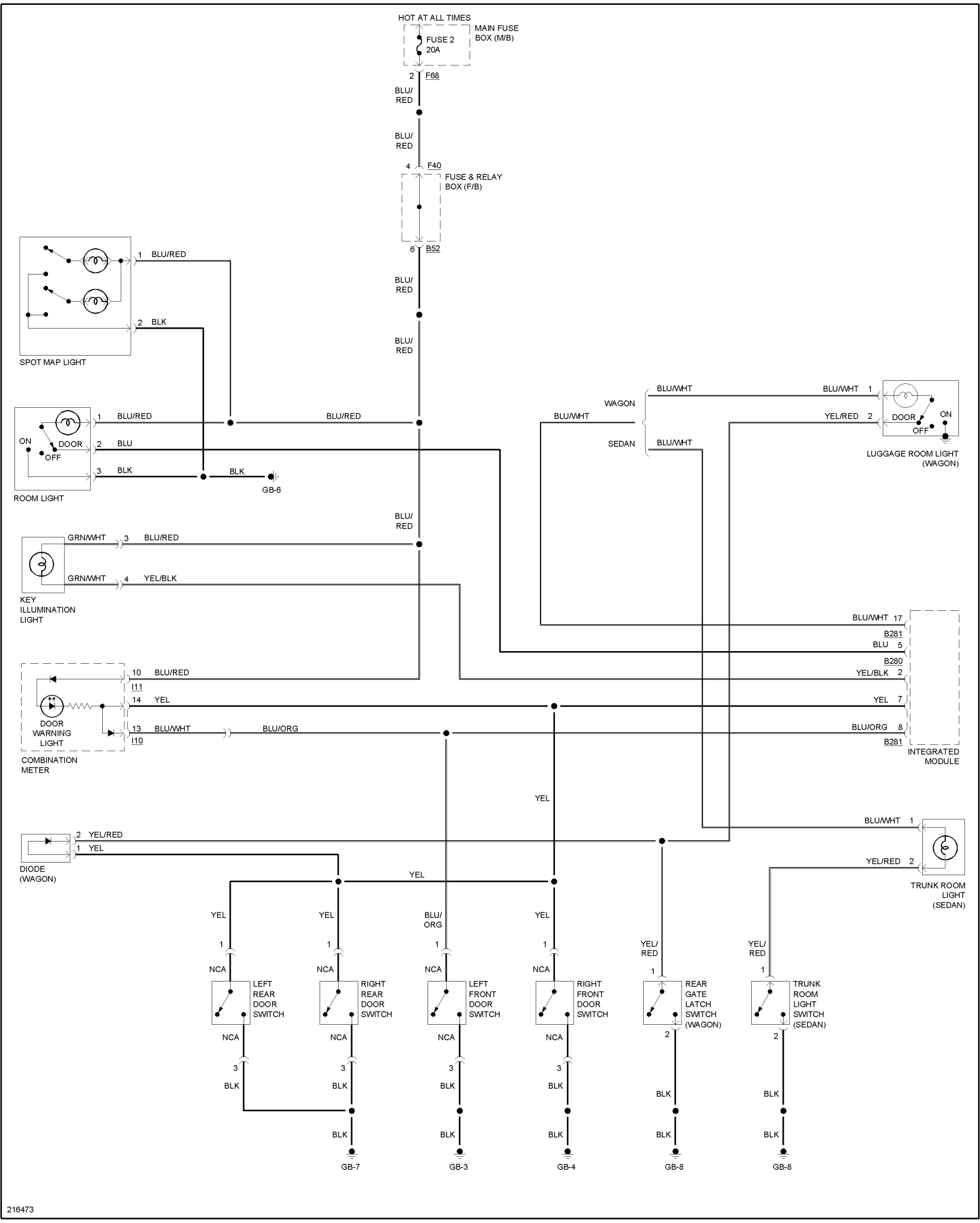
HOT AT ALL TIMES
MAIN FUSE BOX (M/B)
FUSE 2
20A
2
F68
BLU/RED
BLU/RED
4
F40
FUSE & RELAY BOX (F/B)
6
B52
BLU/RED
BLU/RED
1
BLU/RED
2
BLK
SPOT MAP LIGHT
1
BLU/RED
BLU/RED
ON
DOOR
OFF
2
BLU
3
BLK
BLK
GB-6
ROOM LIGHT
BLU/RED
GRN/WHT
3
BLU/RED
GRN/WHT
4
YEL/BLK
KEY ILLUMINATION LIGHT
WAGON
SEDAN
BLU/WHT
BLU/WHT
BLU/WHT
BLU/WHT
1
YEL/RED
2
DOOR
ON
OFF
LUGGAGE ROOM LIGHT (WAGON)
BLU/WHT
17
B281
BLU
5
B280
YEL/BLK
2
YEL
7
BLU/ORG
8
B281
INTEGRATED MODULE
10
BLU/RED
I11
14
YEL
13
BLU/WHT
BLU/ORG
I10
DOOR WARNING LIGHT
COMBINATION METER
YEL
2
YEL/RED
1
YEL
DIODE (WAGON)
BLU/WHT
1
YEL/RED
2
TRUNK ROOM LIGHT (SEDAN)
YEL
YEL
YEL
BLU/ORG
YEL/RED
YEL/RED
1
NCA
LEFT REAR DOOR SWITCH
RIGHT REAR DOOR SWITCH
LEFT FRONT DOOR SWITCH
RIGHT FRONT DOOR SWITCH
REAR GATE LATCH SWITCH (WAGON)
TRUNK ROOM LIGHT SWITCH (SEDAN)
2
3
BLK
GB-7
GB-3
GB-4
GB-8
GB-8

216473